RONALD H. BROWN
BERTHEA
GRIMSTAD

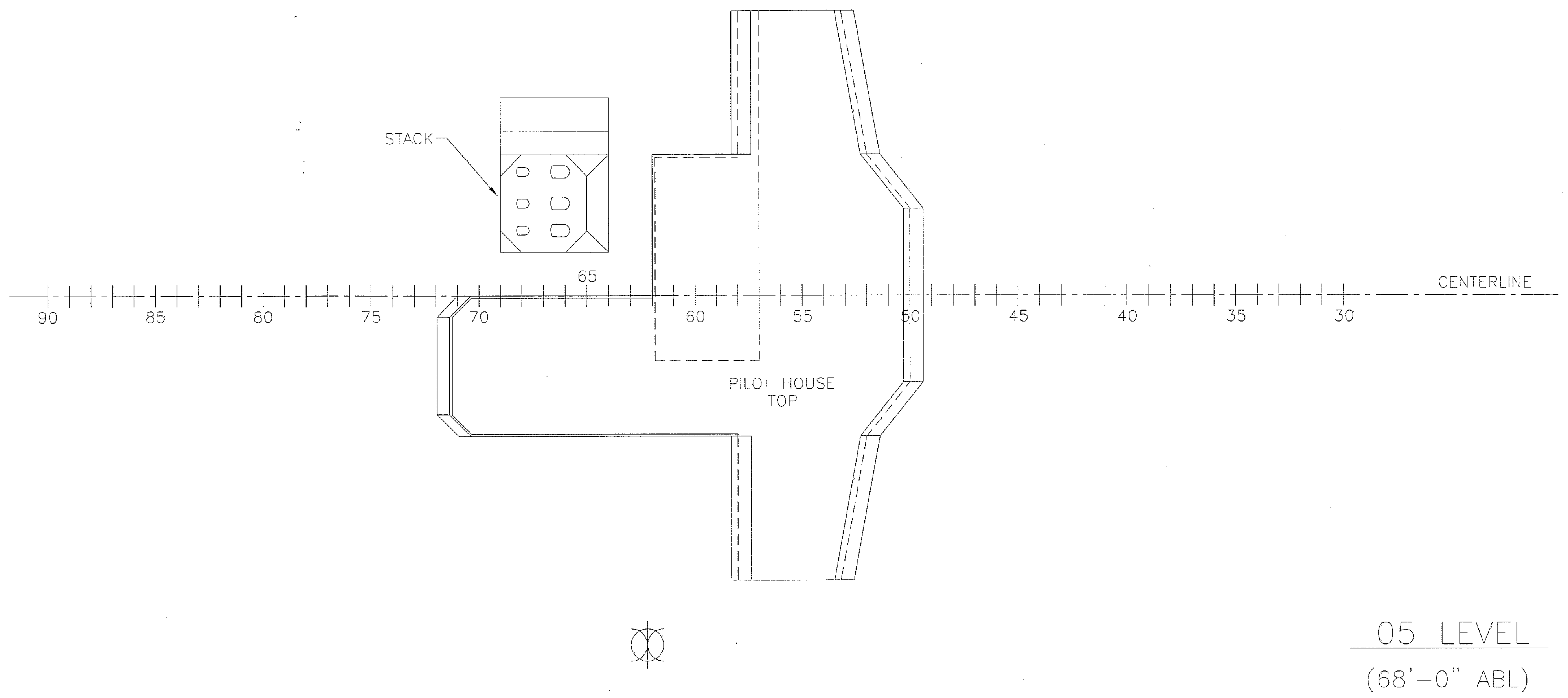
STACK
65
PILOT HOUSE
TOP
CENTERLINE
90
85
80
75
70
60
55
50
45
40
35
30

05 LEVEL

(68'-0" ABL)

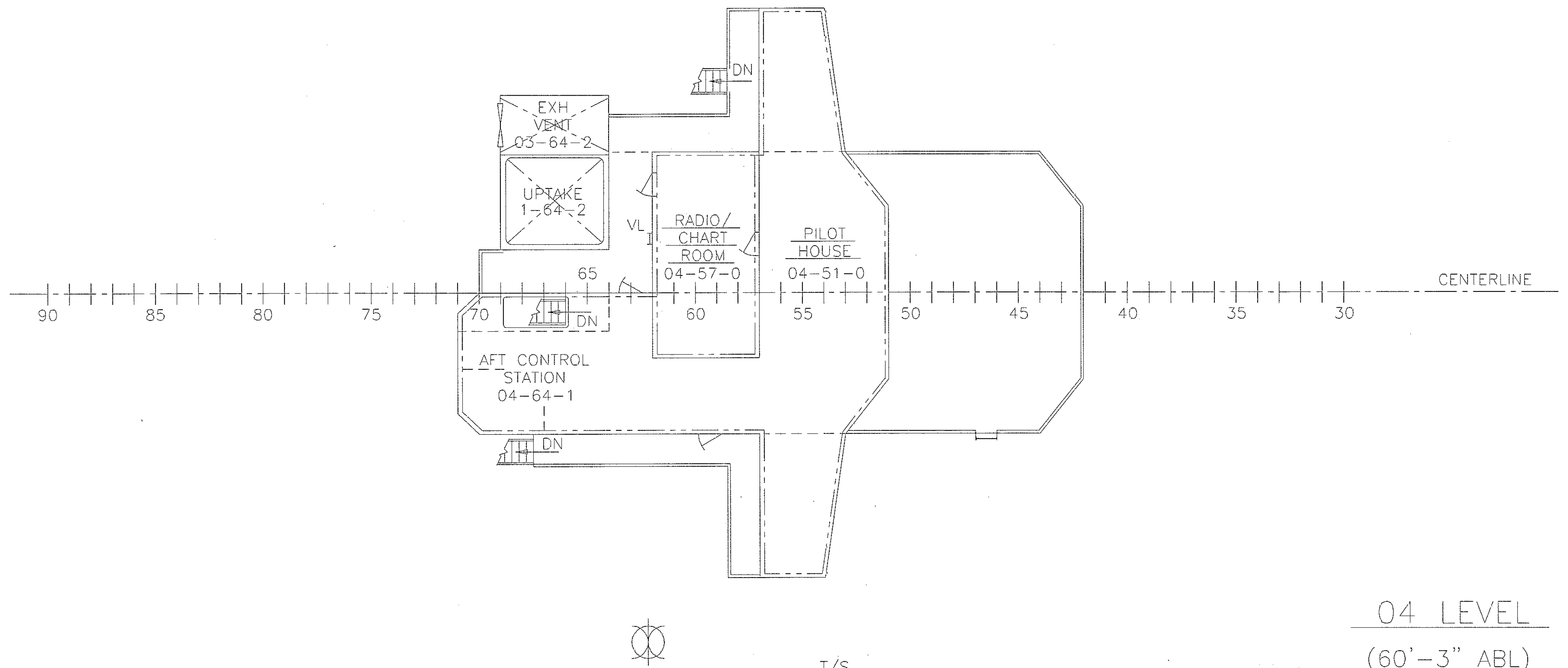
DN
EXH
VENT
03-64-2
UPTAKE
1-64-2
VL
RADIO/
CHART
ROOM
04-57-0
PILOT
HOUSE
04-51-0
65
70
DN
AFT CONTROL
STATION
04-64-1
DN
CENTERLINE
90
85
80
75
60
55
50
45
40
35
30

04 LEVEL △A^1

(60'-3" ABL)

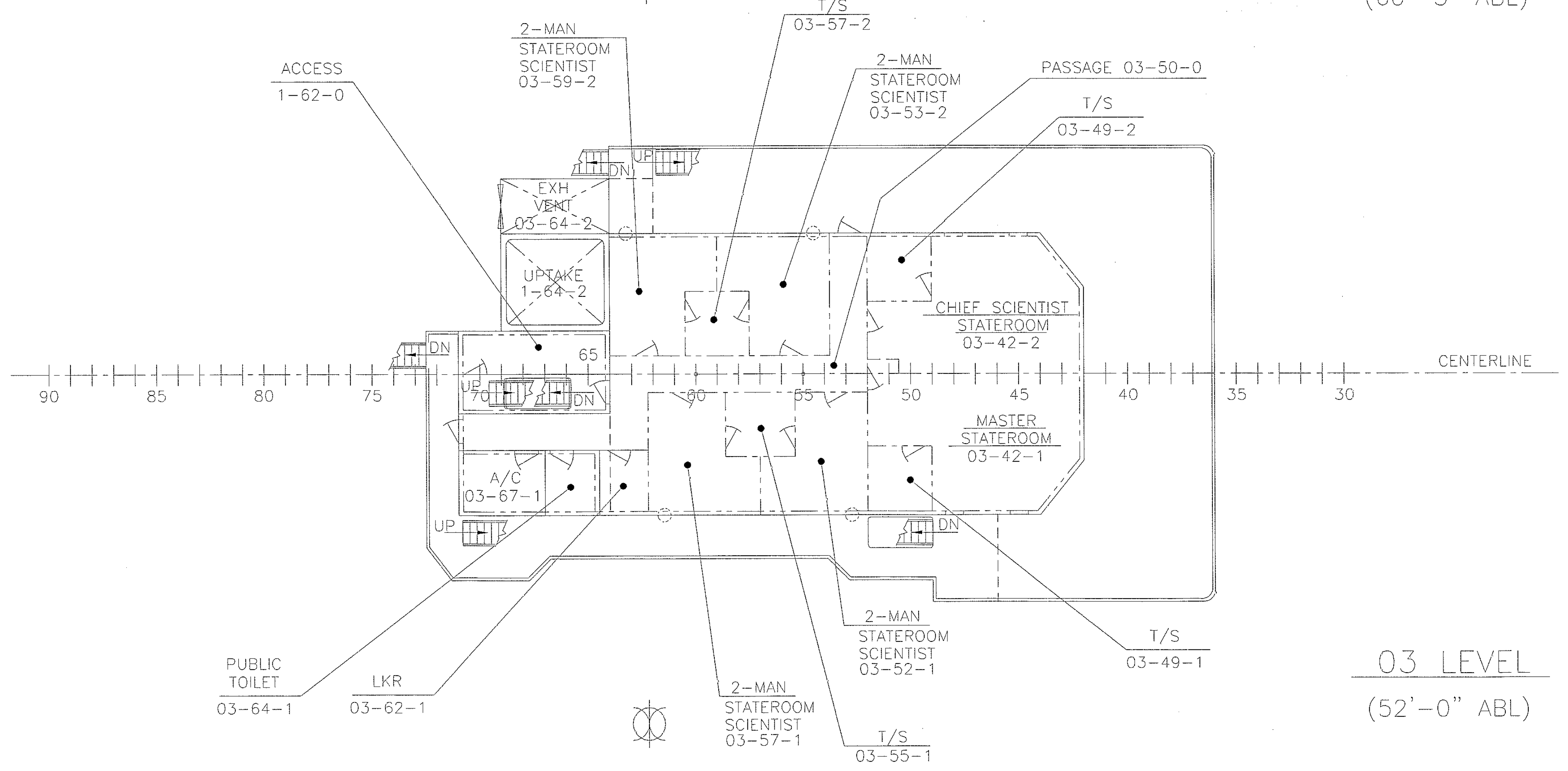
ACCESS
1-62-0
2-MAN
STATEROOM
SCIENTIST
03-59-2
T/S
03-57-2
2-MAN
STATEROOM
SCIENTIST
03-53-2
PASSAGE 03-50-0
T/S
03-49-2
EXH
VENT
03-64-2
UPTAKE
1-64-2
UP
DN
CHIEF SCIENTIST
STATEROOM
03-42-2
65
70
MASTER
STATEROOM
03-42-1
A/C
03-67-1
UP
DN
CENTERLINE
90
85
80
75
60
55
50
45
40
35
30
PUBLIC
TOILET
03-64-1
LKR
03-62-1
2-MAN
STATEROOM
SCIENTIST
03-57-1
T/S
03-55-1
2-MAN
STATEROOM
SCIENTIST
03-52-1
T/S
03-49-1

03 LEVEL △A^2

(52'-0" ABL)

REVISIONS

ZONE	REV	DESCRIPTION	DATE	APPROVED
7-D	A	1. 04 LVL: ADDED AFT CONTROL STATION LABEL 04-64-1.	3/10/97	BWJ/FMA /FJA
7-B		2. 03 LVL: DELETED PASSAGE 03-62-0.		
16-G 18-F		3. 02 LVL: CHANGED 1 MAN SR SCIENTIST (W/PULLMAN BERTH) TO 2 MAN CREW, 02-42-6 & IDENTIFIED HYDROBOOM.		
VAR		4. SHT 2, 3, & 4: ADDED TRANSDUCER TUBE & CALLOUT, ALL LEVELS FR 92.		
17-D 16-C 13-C 14-C		5. 01 LVL: CHANGED ACCESS LABEL 01-62-0 TO 1-62-0; CHANGED LABEL COMPARTMENT 3-44-2 WAS STAIR PASSAGE; CHANGED LKR TO CG LKR 01-16-2. REVISED FORWARD BITTS PER DESIGN DEVELOPMENT.		
VAR 27-G		6. MAIN DECK: CREATED FAN ROOMS & ADDED CALLOUTS; CHANGED HYDRO LAB LABEL 1-64-2 TO 1-69-2.		
27-C 24-B		7. 1ST PLATF: RELOCATED GRAVITY METER ROOM AND ADDED LABEL 2-82-2, FR 82-87. CHANGED CG LKR TO LKR 2-24-1.		
26-C		8. 1ST PLATF: REVISED GYRO ROOM, BULKHEADS & LABEL WAS MARK 29 GYRO ROOM.		
36-F 35-D 37-D 37-G 37-F		9. HOLD & TANK TOP PLAN: CHANGED COFFERDAM (P) 3-60-4 LABEL TO COFFERDAM (C) 3-60-0; DELETED COFFERDAM (S) 3-60-3; CHANGED LUBE OIL LABEL 3-90-2 TO 3-90-1, FUEL OIL SVCE LABEL 3-90-4 TO 3-90-3, Z-DR OIL LABEL 3-90-1 TO 3-90-2, HYDR OIL LABEL 3-90-3 TO 3-90-4, & FUEL OIL SVCE LABEL 3-90-5 TO 3-90-6; #5 FUEL OIL P & S LABELS, (WERE 4-92-2 & 4-92-1), TO REFLECT CORRECT ORIENTATION.		
35-C		10. DOUBLE BOTTOM PLAN: CHANGED #3 FUEL OIL LABEL 4-46-0 TO 4-40-01.		
17-C 17-B		11. 01 LVL: ADDED STEEL BULKHEAD 13'-0" OFF CL TO STBD.		
17-F 18-F		12. 02 LVL: ADDED FAN PLENUM AND RADAR TO AFT DECK.		
		ITEM 1-5 & 10 PER NAVY COMMENTS DTD 12-12-94; SER 1553/AGOR/1041 ITEM 4 PER ECP 004. ITEM 8 PER ECP 015. ITEMS 6,7,9,11 & 12 PER DESIGN DEVELOPMENT.		

LIMITED RIGHTS LEGEND

CONTRACT NO. N00024-93-C-2302

CONTRACTOR: HALTER MARINE, INC.
13085 SEAWAY ROAD , P.O. BOX 3029
GULFPORT, MS 39503

THE LIMITED RIGHTS GRANTED TO THE GOVERNMENT UNDER THE CONTRACT LISTED ABOVE ARE NOT SUBJECT TO AN EXPIRATION DATE.

THE RESTRICTIONS GOVERNING THE USE AND DISCLOSURE OF TECHNICAL DATA MARKED WITH THIS LEGEND ARE SET FORTH IN THE DEFINITION OF "LIMITED RIGHTS" IN PARAGRAPH (a) (15) OF THE CLAUSE AT 252.227-7013 OF THE CONTRACT LISTED ABOVE.

NO.	TITLE	DRAWING NUMBER

REFERENCES

03 LEVEL AND ABOVE

DISTRIBUTION AUTHORIZED TO DOD AND DOD CONTRACTORS ONLY; (CRITICAL TECHNOLOGY) JANUARY 1993. OTHER REQUESTS SHALL BE REFERRED TO NAVSEA CODE 09B2.

						A	A	A	A
10	9	8	7	6	5	4	3	2	1

SHEET NO.

REVISION STATUS OF SHEETS

CONTRACT NO.
N00024-93-C-2302

A Trinity Industries Co.
Halter Marine, Inc.
14055 Industrial Seaway Rd.
P.O. Box 3029 - Gulfport, MS. 39505

CAGE CODE 3B213

		DATE
DRAWN BY:	F.ANDERSON	5/5/94
CHECKED BY:	J.W.S.	5/16/94
APPVD	J.C.P	5/16/94
APPVD A.B.S.		
APPVD U.S.C.G.		
APPVD SUPSHIPS		

JOB NO. M252
HULL NO. 1417

DEPARTMENT OF THE NAVY
NAVAL SEA SYSTEMS COMMAND
WASHINGTON, D.C. 20362-5101

AGOR 24 OCEANOGRAPHIC RESEARCH SHIP

GENERAL ARRANGEMENTS DECKS AND PLATFORMS (NOAA-AGOR)

GENL ARR DECKS & PLATFORMS

SIZE	CAGE CODE	SWBS	DWG NO.	REV
H	53711	085	6932712	A

SCALE: 1/8"=1'-0"

SHEET 1 OF 4

DWG NO.	SH	REV
6932712	1	A

DWG NO. 6932712

*R:\M250\712-01A.DWG MAR/06/97 07:31am SP01

PLOT: 1=96

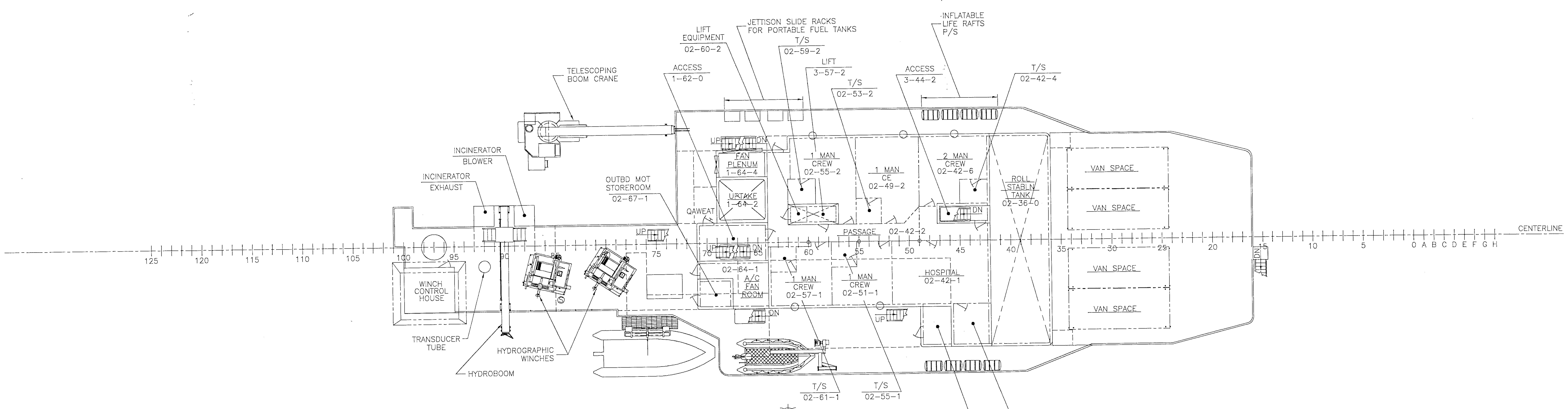
TELESCOPING BOOM CRANE
LIFT EQUIPMENT 02-60-2
JETTISON SLIDE RACKS FOR PORTABLE FUEL TANKS
T/S 02-59-2
LIFT 3-57-2
T/S 02-53-2
ACCESS 1-62-0
INFLATABLE LIFE RAFTS P/S
ACCESS 3-44-2
T/S 02-42-4
INCINERATOR BLOWER
INCINERATOR EXHAUST
OUTBD MOT STOREROOM 02-67-1
UP
DN
FAN PLENUM 1-64-4
UPTAKE 1-64-2
QAWEAT
1 MAN CREW 02-55-2
1 MAN CE 02-49-2
2 MAN CREW 02-42-6
ROLL STABLN TANK 02-36-0
VAN SPACE
VAN SPACE
VAN SPACE
VAN SPACE
PASSAGE 02-42-2
CENTERLINE
125 120 115 110 105 100 95 90 85 80 75 70 65 60 55 50 45 40 35 30 25 20 15 10 5 0 A B C D E F G H
WINCH CONTROL HOUSE
02-64-1
A/C FAN ROOM
1 MAN CREW 02-57-1
1 MAN CREW 02-51-1
HOSPITAL 02-42-1
TRANSDUCER TUBE
HYDROGRAPHIC WINCHES
HYDROBOOM
T/S 02-61-1
T/S 02-55-1
DECK LKR 02-46-1
HOSPITAL T/S 02-42-3

02 LEVEL $\triangle_{A}^{3,4,12}$

(43'-9" ABL)

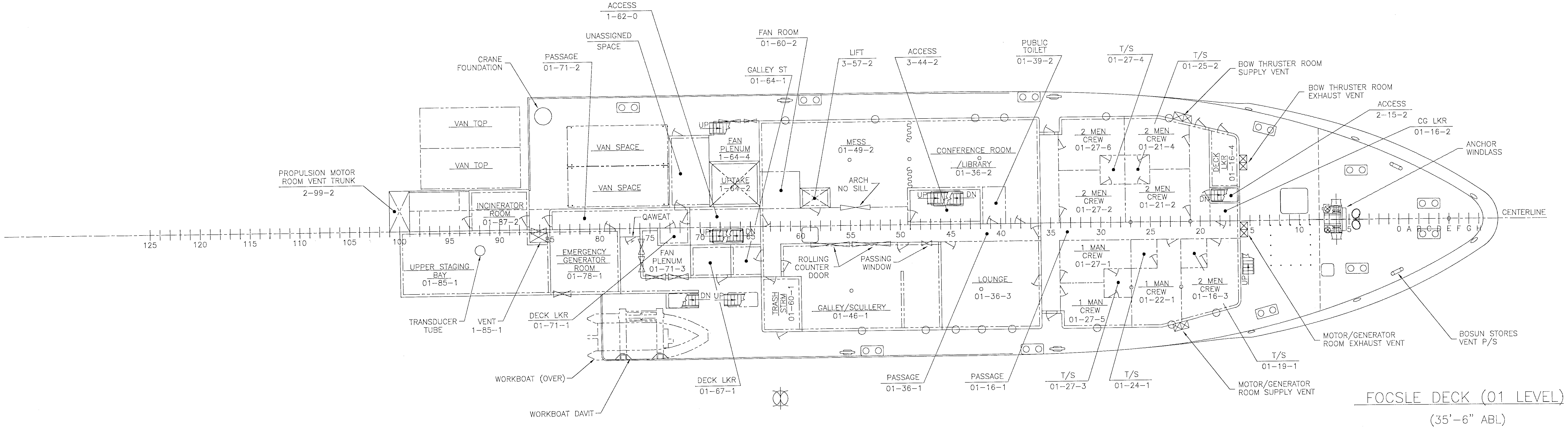
ACCESS 1-62-0
UNASSIGNED SPACE
FAN ROOM 01-60-2
CRANE FOUNDATION
PASSAGE 01-71-2
GALLEY ST 01-64-1
LIFT 3-57-2
ACCESS 3-44-2
PUBLIC TOILET 01-39-2
T/S 01-27-4
T/S 01-25-2
BOW THRUSTER ROOM SUPPLY VENT
BOW THRUSTER ROOM EXHAUST VENT
ACCESS 2-15-2
CG LKR 01-16-2
ANCHOR WINDLASS
VAN TOP
VAN TOP
VAN SPACE
VAN SPACE
FAN PLENUM 1-64-4
UPTAKE 1-64-2
MESS 01-49-2
ARCH NO SILL
CONFERENCE ROOM /LIBRARY 01-36-2
2 MEN CREW 01-27-6
2 MEN CREW 01-21-4
2 MEN CREW 01-27-2
2 MEN CREW 01-21-2
DECK LKR 01-16-4
PROPULSION MOTOR ROOM VENT TRUNK 2-99-2
INCINERATOR ROOM 01-87-2
QAWEAT
CENTERLINE
125 120 115 110 105 100 95 90 85 80 75 70 65 60 55 50 45 40 35 30 25 20 5 10 5 0 A B C D E F G H
UPPER STAGING BAY 01-85-1
EMERGENCY GENERATOR ROOM 01-78-1
FAN PLENUM 01-71-3
ROLLING COUNTER DOOR
PASSING WINDOW
LOUNGE 01-36-3
1 MAN CREW 01-27-1
1 MAN CREW 01-22-1
2 MEN CREW 01-16-3
1 MAN CREW 01-27-5
TRASH STRM 01-60-1
GALLEY/SCULLERY 01-46-1
DN UP
TRANSDUCER TUBE
VENT 1-85-1
DECK LKR 01-71-1
MOTOR/GENERATOR ROOM EXHAUST VENT
BOSUN STORES VENT P/S
T/S 01-19-1
WORKBOAT (OVER)
WORKBOAT DAVIT
DECK LKR 01-67-1
PASSAGE 01-36-1
PASSAGE 01-16-1
T/S 01-27-3
T/S 01-24-1
MOTOR/GENERATOR ROOM SUPPLY VENT

FOCSLE DECK (01 LEVEL) $\triangle_{A}^{4,5,11}$

(35'-6" ABL)

01 AND 02 LEVELS

CONTRACT NO. N00024-93-C-2302		GENL ARR DECKS & PLATFORMS (NOAA-AGOR				
DRAWN BY: F.M.A.	CHECKED BY: J.W.S.	SIZE H	CAGE CODE 53711	SWBS 085	DWG NO. 6932712	REV A
APPVD J.C.P.	DATE 5/16/94					
JOB NO. M252	HULL NO. 1417	SCALE: 1/8"=1'-0"			SHEET 2 OF 4	

DWG NO.	SH	REV
6932712	2	A

*H:\PROJECTS\ACAD\M250\712-02A.DWG MAR/13/97 08:36am NA01 PLOT:

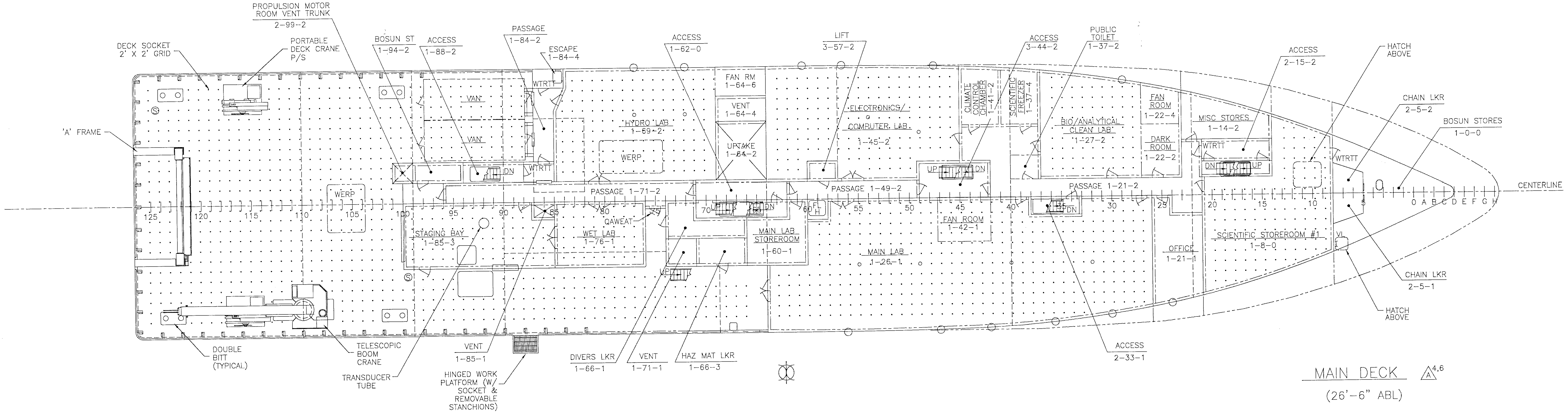
DECK SOCKET
2' X 2' GRID
PROPULSION MOTOR
ROOM VENT TRUNK
2-99-2
PORTABLE
DECK CRANE
P/S
'A' FRAME
BOSUN ST
1-94-2
ACCESS
1-88-2
PASSAGE
1-84-2
ESCAPE
1-84-4
ACCESS
1-62-0
LIFT
3-57-2
ACCESS
3-44-2
PUBLIC
TOILET
1-37-2
ACCESS
2-15-2
HATCH
ABOVE
CHAIN LKR
2-5-2
BOSUN STORES
1-0-0
CENTERLINE
VAN
VAN
WTRTT
DN
HYDRO LAB
1-69-2
WERP
FAN RM
1-64-6
VENT
1-64-4
UPTAKE
1-64-2
ELECTRONICS/
COMPUTER LAB
1-45-2
CLIMATE
CONTROL
CHAMBER
1-41-2
SCIENTIFIC
FREEZER
1-37-4
BIO/ANALYTICAL
CLEAN LAB
1-27-2
FAN
ROOM
1-22-4
DARK
ROOM
1-22-2
MISC STORES
1-14-2
UP
PASSAGE 1-71-2
PASSAGE 1-49-2
PASSAGE 1-21-2
125
120
115
110
105
100
95
90
85
80
75
70
65
60
55
50
45
40
35
30
25
20
15
10
5
0 A B C D E F G H
STAGING BAY
1-85-3
WET LAB
1-76-1
QAWEAT
MAIN LAB
STOREROOM
1-60-1
FL
H
FAN ROOM
1-42-1
MAIN LAB
1-26-1
OFFICE
1-21-1
SCIENTIFIC STOREROOM #1
1-8-0
VL
CHAIN LKR
2-5-1
HATCH
ABOVE
ACCESS
2-33-1
DOUBLE
BITT
(TYPICAL)
TELESCOPIC
BOOM
CRANE
TRANSDUCER
TUBE
VENT
1-85-1
HINGED WORK
PLATFORM (W/
SOCKET &
REMOVABLE
STANCHIONS)
DIVERS LKR
1-66-1
VENT
1-71-1
HAZ MAT LKR
1-66-3

MAIN DECK $^{4,6}_{A}$

(26'-6" ABL)

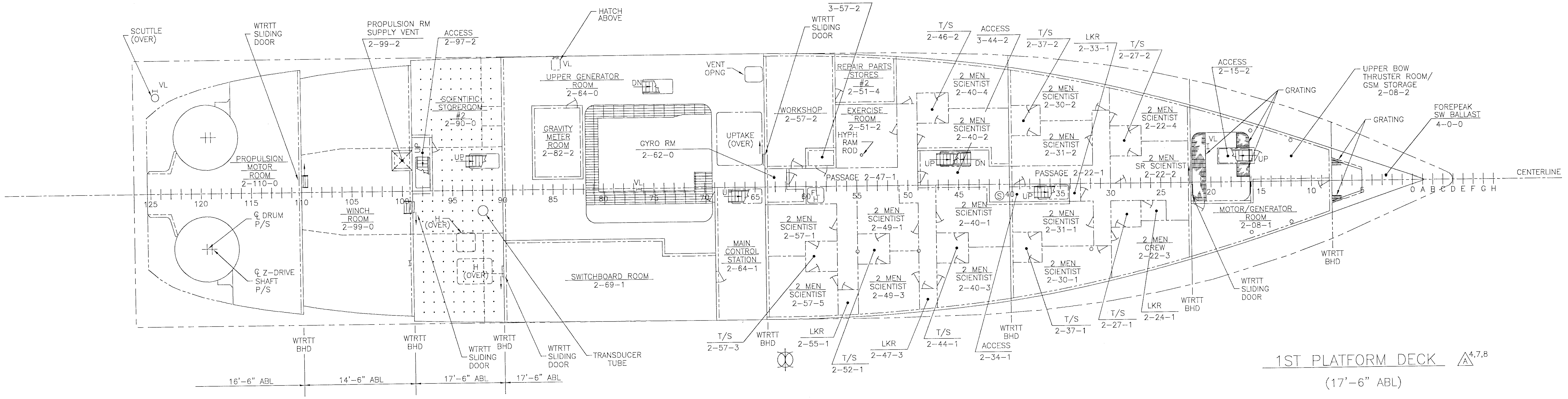
SCUTTLE
(OVER)
VL
WTRTT
SLIDING
DOOR
PROPULSION RM
SUPPLY VENT
2-99-2
ACCESS
2-97-2
HATCH
ABOVE
LIFT
3-57-2
WTRTT
SLIDING
DOOR
VENT
OPNG
UPPER GENERATOR
ROOM
2-64-0
DN
T/S
2-46-2
ACCESS
3-44-2
T/S
2-37-2
LKR
2-33-1
T/S
2-27-2
ACCESS
2-15-2
GRATING
UPPER BOW
THRUSTER ROOM/
GSM STORAGE
2-08-2
GRATING
FOREPEAK
SW BALLAST
4-0-0
PROPULSION
MOTOR
ROOM
2-110-0
SCIENTIFIC
STOREROOM
#2
2-90-0
UP
GRAVITY
METER
ROOM
2-82-2
GYRO RM
2-62-0
UPTAKE
(OVER)
WORKSHOP
2-57-2
REPAIR PARTS
STORES
#2
2-51-4
EXERCISE
ROOM
2-51-2
HYPH
RAM
ROD
2 MEN
SCIENTIST
2-40-4
2 MEN
SCIENTIST
2-40-2
2 MEN
SCIENTIST
2-30-2
2 MEN
SCIENTIST
2-31-2
2 MEN
SCIENTIST
2-22-4
2 MEN
SR SCIENTIST
2-22-2
PASSAGE 2-47-1
PASSAGE 2-22-1
CENTERLINE
125
120
115
110
105
100
95
90
85
80
75
70
65
60
55
50
45
40
35
30
25
20
15
10
5
0 A B C D E F G H
FL
H
WINCH
ROOM
2-99-0
℄ DRUM
P/S
℄ Z-DRIVE
SHAFT
P/S
H
(OVER)
H
(OVER)
SWITCHBOARD ROOM
2-69-1
MAIN
CONTROL
STATION
2-64-1
2 MEN
SCIENTIST
2-57-1
2 MEN
SCIENTIST
2-57-5
2 MEN
SCIENTIST
2-49-1
2 MEN
SCIENTIST
2-49-3
2 MEN
SCIENTIST
2-40-1
2 MEN
SCIENTIST
2-40-3
2 MEN
SCIENTIST
2-31-1
2 MEN
SCIENTIST
2-30-1
2 MEN
CREW
2-22-3
MOTOR/GENERATOR
ROOM
2-08-1
WTRTT
BHD
WTRTT
SLIDING
DOOR
WTRTT
BHD
WTRTT
BHD
WTRTT
BHD
WTRTT
SLIDING
DOOR
WTRTT
BHD
WTRTT
SLIDING
DOOR
TRANSDUCER
TUBE
T/S
2-57-3
WTRTT
BHD
LKR
2-55-1
T/S
2-52-1
LKR
2-47-3
T/S
2-44-1
WTRTT
BHD
ACCESS
2-34-1
T/S
2-37-1
T/S
2-27-1
LKR
2-24-1
WTRTT
BHD
16'-6" ABL
14'-6" ABL
17'-6" ABL
17'-6" ABL

1ST PLATFORM DECK $^{4,7,8}_{A}$

(17'-6" ABL)

1ST PLATFORM & MAIN DECK

CONTRACT NO. N00024-93-C-2302		GENL ARR DECKS AND PLATFORMS (NOAA-AGOR)				
DRAWN BY: F.M.A.	CHECKED BY: J.W.S.	SIZE H	CAGE CODE 53711	SWBS 085	DWG NO. 6932712	REV A
APPVD J.C.P.	DATE 5/16/94					
JOB NO. M252	HULL NO. 1417	SCALE: 1/8"=1'-0"			SHEET 3 OF 4	

DWG NO.	SH	REV
6932712	3	A

*R:\M250\712-03A.DWG MAR/06/97 07:23am SP01

PLOT: 1=96

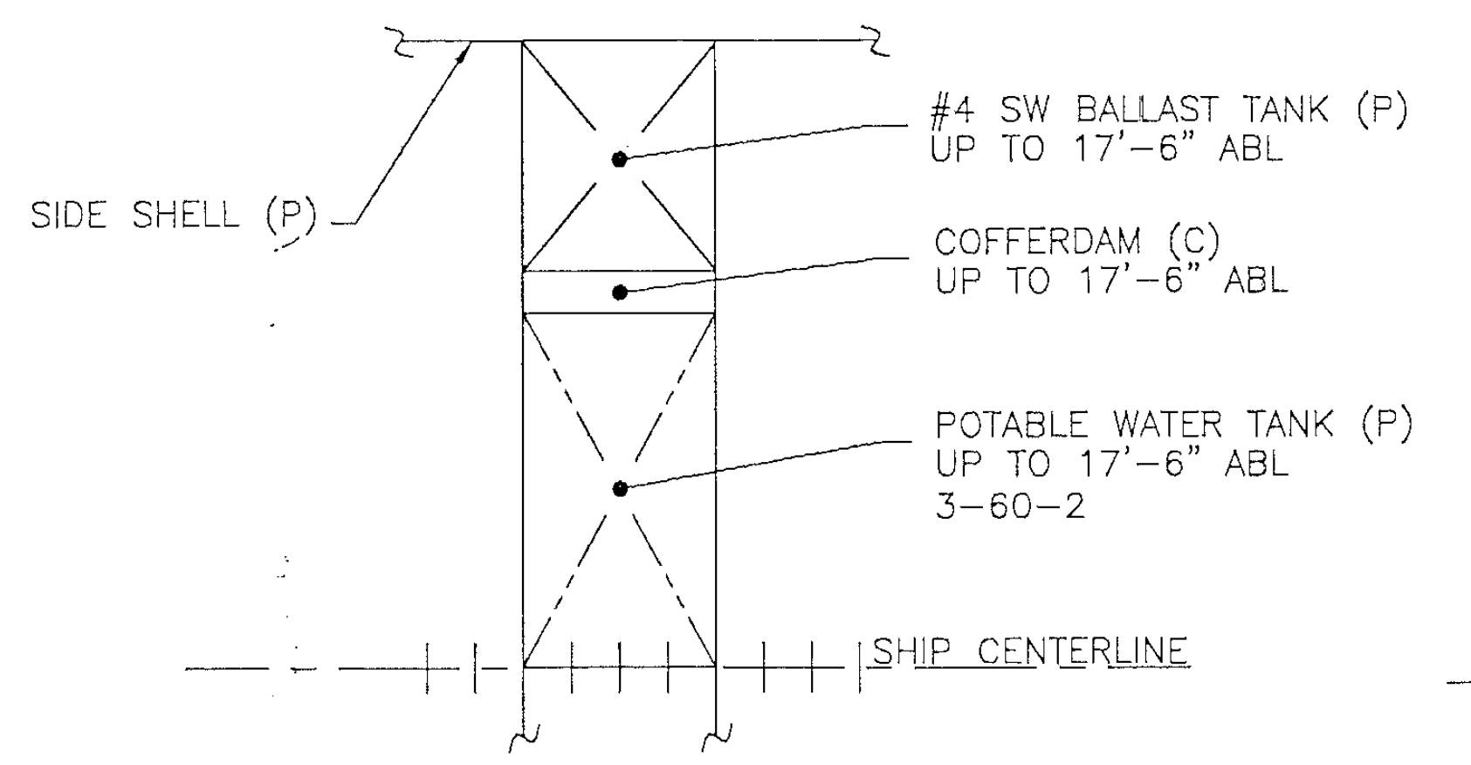
SIDE SHELL (P)
#4 SW BALLAST TANK (P)
UP TO 17'-6" ABL
COFFERDAM (C)
UP TO 17'-6" ABL
POTABLE WATER TANK (P)
UP TO 17'-6" ABL
3-60-2
SHIP CENTERLINE

PART PLAN (10'-3" ABL) A 9

PORT SIDE SHOWN
STBD SIDE SIMILAR BUT OPPOSITE

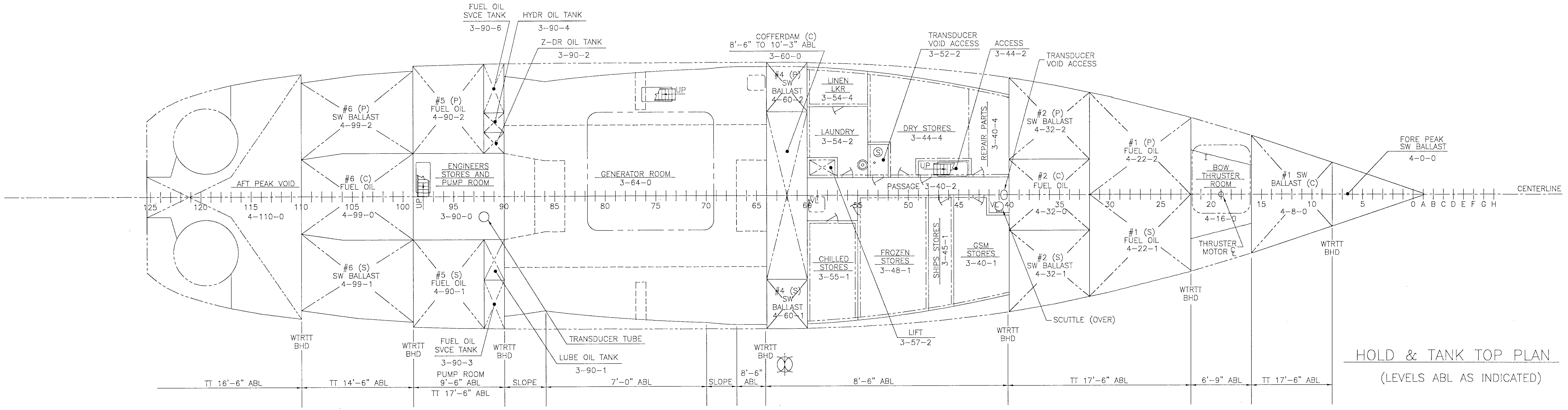
FUEL OIL SVCE TANK 3-90-6
HYDR OIL TANK 3-90-4
Z-DR OIL TANK 3-90-2
COFFERDAM (C) 8'-6" TO 10'-3" ABL 3-60-0
TRANSDUCER VOID ACCESS 3-52-2
ACCESS 3-44-2
TRANSDUCER VOID ACCESS
#6 (P) SW BALLAST 4-99-2
#5 (P) FUEL OIL 4-90-2
#4 (P) SW BALLAST 4-60-2
LINEN LKR 3-54-4
LAUNDRY 3-54-2
DRY STORES 3-44-4
REPAIR PARTS 3-40-4
#2 (P) SW BALLAST 4-32-2
#1 (P) FUEL OIL 4-22-2
BOW THRUSTER ROOM
#1 SW BALLAST (C) 4-8-0
FORE PEAK SW BALLAST 4-0-0
AFT PEAK VOID 4-110-0
#6 (C) FUEL OIL 4-99-0
ENGINEERS STORES AND PUMP ROOM 3-90-0
UP
GENERATOR ROOM 3-64-0
PASSAGE 3-40-2
#2 (C) FUEL OIL 4-32-0
4-16-0
CENTERLINE
125 120 115 110 105 100 95 90 85 80 75 70 65 60 55 50 45 40 35 30 25 20 15 10 5 0 A B C D E F G H
#6 (S) SW BALLAST 4-99-1
#5 (S) FUEL OIL 4-90-1
#4 (S) SW BALLAST 4-60-1
CHILLED STORES 3-55-1
FROZEN STORES 3-48-1
SHIPS STORES 3-45-1
GSM STORES 3-40-1
#2 (S) SW BALLAST 4-32-1
#1 (S) FUEL OIL 4-22-1
THRUSTER MOTOR ℄
SCUTTLE (OVER)
LIFT 3-57-2
TRANSDUCER TUBE
LUBE OIL TANK 3-90-1
FUEL OIL SVCE TANK 3-90-3
WTRTT BHD
TT 16'-6" ABL
TT 14'-6" ABL
PUMP ROOM 9'-6" ABL
TT 17'-6" ABL
SLOPE
7'-0" ABL
8'-6" ABL
8'-6" ABL
TT 17'-6" ABL
6'-9" ABL
TT 17'-6" ABL

HOLD & TANK TOP PLAN A 4,9,13

(LEVELS ABL AS INDICATED)

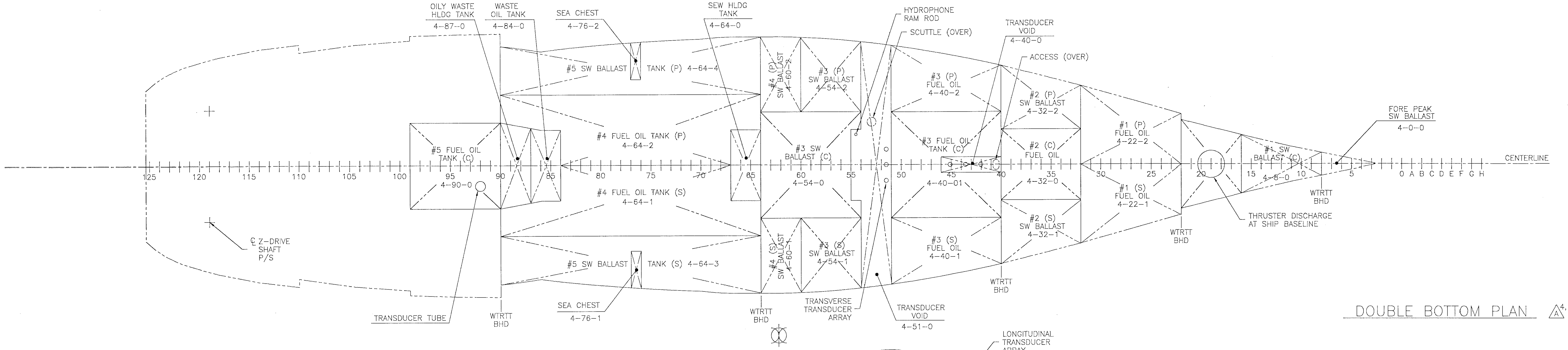
OILY WASTE HLDG TANK 4-87-0
WASTE OIL TANK 4-84-0
SEA CHEST 4-76-2
SEW HLDG TANK 4-64-0
HYDROPHONE RAM ROD
SCUTTLE (OVER)
TRANSDUCER VOID 4-40-0
ACCESS (OVER)
#5 SW BALLAST TANK (P) 4-64-4
#4 (P) SW BALLAST 4-60-2
#3 (P) SW BALLAST 4-54-2
#3 (P) FUEL OIL 4-40-2
#2 (P) SW BALLAST 4-32-2
#1 (P) FUEL OIL 4-22-2
FORE PEAK SW BALLAST 4-0-0
#5 FUEL OIL TANK (C) 4-90-0
#4 FUEL OIL TANK (P) 4-64-2
#3 SW BALLAST (C) 4-54-0
#3 FUEL OIL TANK (C) 4-40-01
#2 (C) FUEL OIL 4-32-0
#1 SW BALLAST (C) 4-8-0
CENTERLINE
125 120 115 110 105 100 95 90 85 80 75 70 65 60 55 50 45 40 35 30 25 20 15 10 5 0 A B C D E F G H
#4 FUEL OIL TANK (S) 4-64-1
#2 (S) SW BALLAST 4-32-1
#1 (S) FUEL OIL 4-22-1
THRUSTER DISCHARGE AT SHIP BASELINE
℄ Z-DRIVE SHAFT P/S
#5 SW BALLAST TANK (S) 4-64-3
#4 (S) SW BALLAST 4-60-1
#3 (S) SW BALLAST 4-54-1
#3 (S) FUEL OIL 4-40-1
SEA CHEST 4-76-1
TRANSDUCER TUBE
TRANSVERSE TRANSDUCER ARRAY
TRANSDUCER VOID 4-51-0
WTRTT BHD

DOUBLE BOTTOM PLAN A 4,10

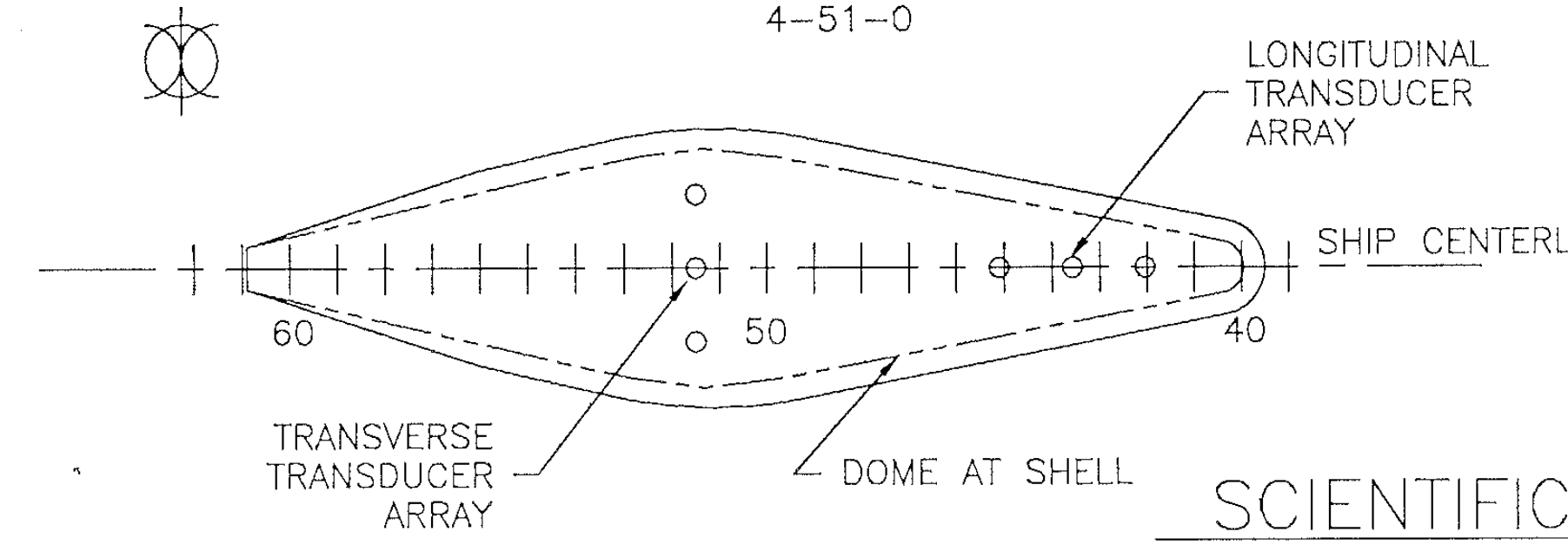
LONGITUDINAL TRANSDUCER ARRAY
SHIP CENTERLINE
60
50
40
TRANSVERSE TRANSDUCER ARRAY
DOME AT SHELL

SCIENTIFIC SONAR DOME

24" DEEP BELOW SHIP BASELINE

DOUBLE BOTTOM AND HOLD PLAN

CONTRACT NO. N00024-93-C-2302		GENL ARR DECKS AND PLATFORMS (NOAA-AGOR)			
DRAWN BY: F.M.A.	CHECKED BY: J.W.S.	SIZE H	CAGE CODE 53711	SWBS 085	DWG NO. 6932712 / REV A
APPVD J.C.P.	DATE 5/16/94				
JOB NO. M252	HULL NO. 1417	SCALE: 1/8"=1'-0"			SHEET 4 OF 4